COAL
Flotation & Tailing

water treatment
and silt dewatering plants

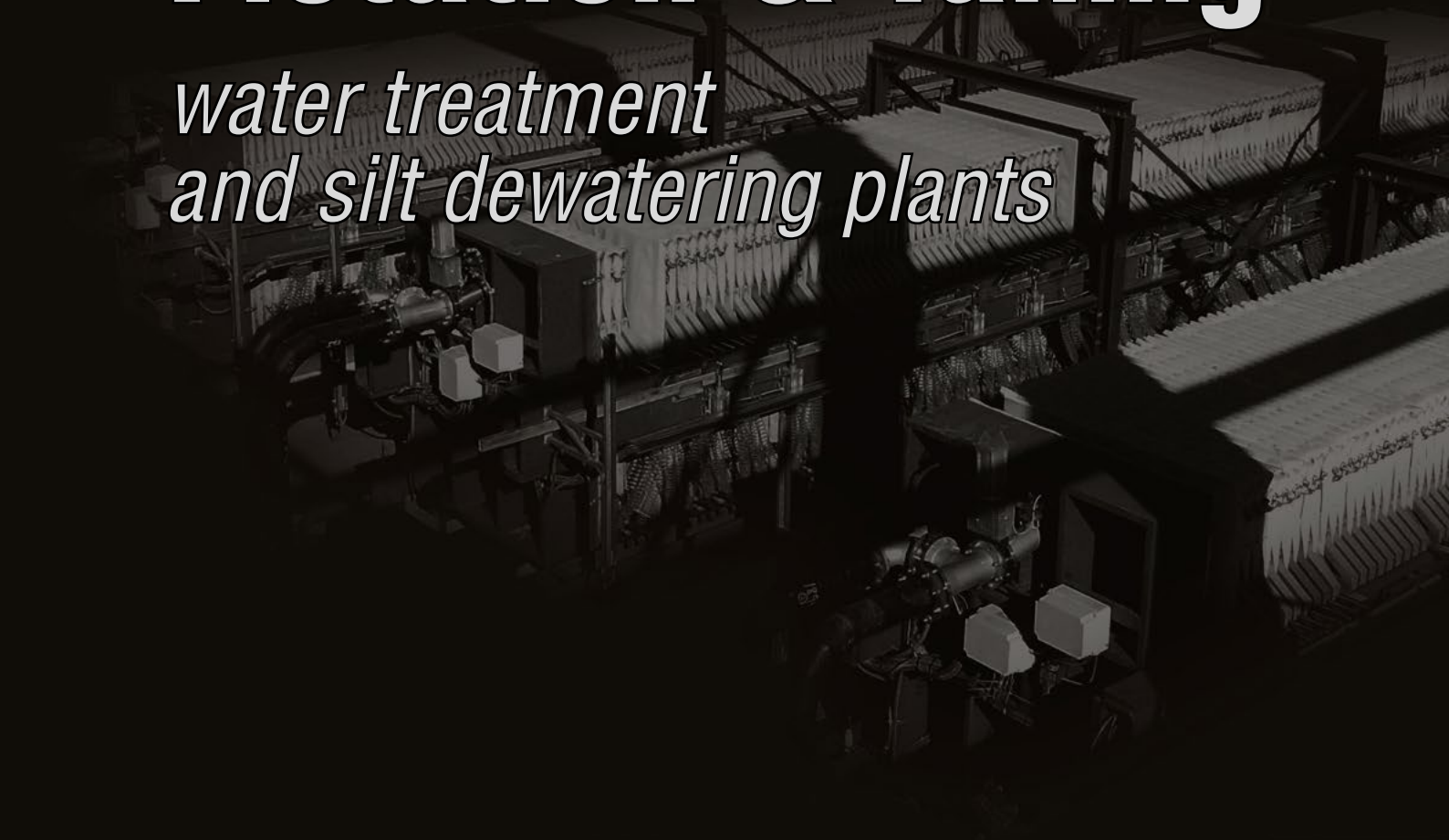

“The three Cs for the founders and their companies’ success are: Capacity, Competence, Courtesy.”

COMPANY

Company

Matec specialises in the design and development of waste water purification and filtration plants for many different industries, the most important of which are: aggregates, gravel, sand, coal, stone, iron-ore, ceramics and glass.

Matec's mission is customer satisfaction, by offering a timely after-sale service as well as before-sale advice, to understand the real requirements of potential customers.

Only in the last two years, Matec has installed over 250 purification plants all over the world: this is a real guarantee of Matec's product and service quality.

The two partners' decades-old experience in the purification industry and their continued presence in the company guarantee you will find the best technical and commercial advice ever.

Matec's new plants are based in Massa, in the very heart of a wide industrial zone, also known as Apuana, and are well equipped to cope with all the needs of the worldwide purification market through their simple but effective organisation.

All machines are entirely built within the factory to offer top-quality 'made in Italy' products that will fulfil the most demanding applications and markets.

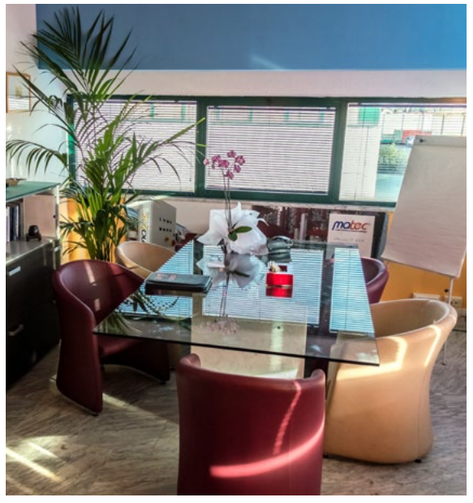

COAL - FLOTATION & TAILING

Coal - Flotation & Tailing

Matec is a technology leader and the leading producer of machines for filtration and mining activities, as well as for water purification.

Treatment of sludge arising from coal processes – concentrated filtration.
Matec designs and manufactures complete filtration systems in the major coal mines. There filter presses are used in sludge treatment, to recover and recycle coal fines whose value is increasing and to dispose of chemical wastes.

Matec treatment plants are designed to maximize the returns of enrichment processes (concentrated filtration) and coal processes.

We have developed extensive experience in treating by-product sludge of coal industry processes.

Matec offers complete turnkey plants for coal mines both for the Tailing sector and the Clean Coal one. The treated product can be recycled and re-used in power stations and to reduce or eliminate the presence of tailing ponds.

Terræ 1300x1300

Perfect for medium and large production plants specialized in coal treatment in mines.
Terrae 1300x1300. It is named after the Latin word for Earth, because it is specially created for and completely dedicated to every kinds of applications in quarries and mines, that is to say for areas where men use the Earth for progress.
The Terrae 1300x1300 is our medium range. It includes the technical specifications of the bigger machines for uses in fields such as:
Aggregates and recycling sector, flow rates up to 500m3/h;
High technology and refinement mining sectors such as Iron-Ore, Coal, Silver, Gold, and in general Ferrous and Non-Ferrous ones.

Benefits :

- 100% Made in ITALY. 100% Made in Tuscany
- HPT (High Pressure Technology) to work at more than 20 BAR
- Gasser Shakers for discharging the cakes perfectly
- Real automatic washing for a complete washing
- Filter cloths attached with strips and rubber connection for an easy replacement
- Open filtrate design allows a simple and rapid identification of worn filter cloths
- Allen Bradley PLC with remote monitoring and assistance
- Number of installed plates can be up to 180 in all presses
- More than 20 models for the best economical/technical solution

Filters with 50 or more plates include the TT2Fast model (fast opening):
The TT2fast opening can discharge the cakes for 100 plates in less than 2 minutes and for 180 plates in less than 3.5 minutes

All made of single-block steel from thick slabs

Plasma, laser or water-jet manufacturing process

The purified water is drained through 4 external manifolds

(to avoid external contacts or leaks)

First choice components by major manufacturers

Stainless steel accessories

High speed and high pressure hydraulic system

Gasser Shaker automatic system for discharging the cakes

Cloth and plate automatic washing

PLC switchboard to control the whole system electronically.

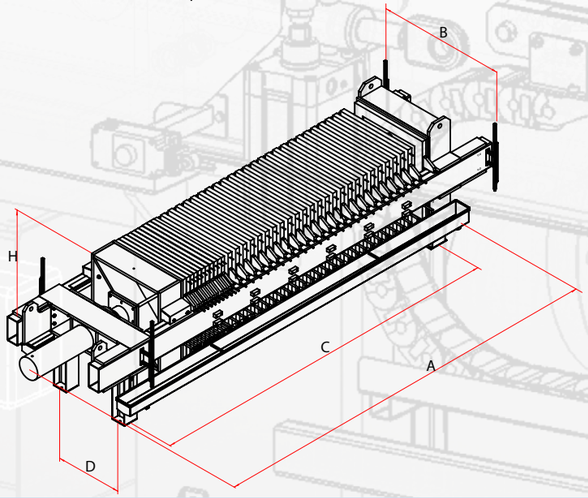

Specifications

Terræ model 1300x1300	A Length	B Width	C Foot Footbase	D Foot Footbase	H Total Height	Dry Weight (Kg)	Chamber Volume (Liters)	Capacity per cycle (Liters)	m³/h (2 cycles)	Ton/h	m³/h (3 cycles)
1300/15	5.388	2.270	3.465	1.170	2.060	6.000	47,3	709,50	1,42	2,63	2,13
1300/20	5.580	2.270	3.475	1.170	2.060	8.500	47,3	946,00	1,89	3,50	2,84
1300/25	7.410	2.270	4.955	1.170	2.060	10.000	47,3	1.182,50	2,37	4,38	3,55
1300/30	9.850	2.270	6.995	1.170	2.060	11.500	47,3	1.419,00	2,84	5,25	4,26
1300/40	11.680	2.270	8.425	1.170	2.060	13.000	47,3	1.892,00	3,78	7,00	5,68
1300/50 New TT	8.173	2.270	6.050	1.170	2.060	13.200	47,3	2.365,00	4,73	8,75	7,10
1300/60 New TT	9.850	2.270	7.120	1.170	2.060	14.500	47,3	2.838,00	5,68	10,50	8,51
1300/70 New TT	9.363	2.270	7.312	1.170	2.060	15.800	47,3	3.311,00	6,62	12,25	9,93
1300/80 New TT	10.469	2.270	8.344	1.170	2.060	17.100	47,3	3.784,00	7,57	14,00	11,35
1300/90 New TT	10.700	2.270	8.575	1.170	2.060	18.400	47,3	4.257,00	8,51	15,75	12,77
1300/100 New TT	11.863	2.270	9.740	1.170	2.060	20.000	47,3	4.730,00	9,46	17,50	14,19
1300/120 New TT	12.723	2.270	10.600	1.170	2.060	22.000	47,3	5.676,00	11,35	21,00	17,03

Terræ 1500x1500

Perfect for large production plants specialized in coal treatment in mines.
Terrae 1500x1500. It is named after the Latin word for Earth, because it is specially created for and completely dedicated to every kinds of applications in quarries and mines, that is to say for areas where men use the Earth for progress. The Terrae 1500x1500 is our big range. It includes the latest and best technologies and technical specifications. This model is available both in side-beams and over-beams:
Aggregates and recycling sector, flow rates up to 900m3/h;
High technology and refinement mining sectors such as Iron-Ore, Coal, Silver, Gold, and in general Ferrous and Non-Ferrous ones.

Benefits :

- 100% Made in ITALY. 100% Made in Tuscany
- HPT (High Pressure Technology) to work at more than 20 BAR
- Gasser Shakers for discharging the cakes perfectly
- Real automatic washing for a complete washing
- Filter cloths attached with strips and rubber connection for an easy replacement
- Open filtrate design allows a simple and rapid identification of worn filter cloths
- Allen Bradley PLC with remote monitoring and assistance
- Number of installed plates can be up to 180 in all presses
- More than 15 models for the best economical/technical solution

Filters with 50 or more plates include the TT2Fast model (fast opening):
The TT2fast opening can discharge the cakes for 100 plates in less than 2 minutes and for 180 plates in less than 3.5 minutes

All made of single-block steel from thick slabs

Plasma, laser or water-jet manufacturing process

The purified water is drained through 4 external manifolds

(to avoid external contacts or leaks)

First choice components by major manufacturers

Stainless steel accessories

High speed and high pressure hydraulic system

Gasser Shaker automatic system for discharging the cakes

Cloth and plate automatic washing

PLC switchboard to control the whole system electronically.

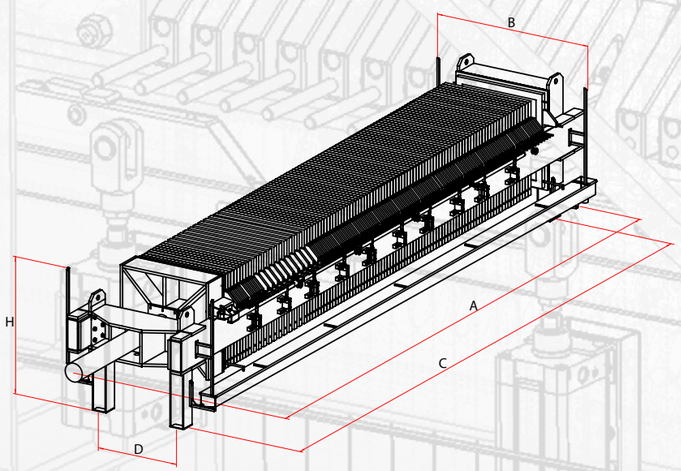

Specifications

Terræ model 1500x1500	A Length	B Width	C Foot Footbase	D Foot Footbase	H Total Height	Dry Weight (Kg)	Chamber Volume (Liters)	Capacity per cycle (Liters)	m³/h (2 cycles)	Ton/h	m³/h (3 cycles)
1500/30	8.475	2.505	5.470	1.360	2.270	12.000	63,1	1.893,00	3,79	7,00	5,68
1500/40	11.700	2.505	7.600	1.360	2.270	13.700	63,1	2.524,00	5,05	9,34	7,57
1500/50 New TT	8.542	2.505	6.360	1.360	2.270	15.800	63,1	3.155,00	6,31	11,67	9,47
1500/60 New TT	9.300	2.505	6.840	1.360	2.270	17.800	63,1	3.786,00	7,57	14,01	11,36
1500/70 New TT	10.200	2.505	8.020	1.360	2.270	19.800	63,1	4.417,00	8,83	16,34	13,25
1500/80 New TT	11.022	2.505	8.840	1.360	2.270	21.500	63,1	5.048,00	10,10	18,68	15,14
1500/90 New TT	11.680	2.505	9.265	1.360	2.270	24.000	63,1	5.679,00	11,36	21,01	17,04
1500/100 New TT	12.635	2.505	10.415	1.360	2.270	25.000	63,1	6.310,00	12,62	23,35	18,93
1500/120 New TT	12.635	2.505	10.415	1.360	2.270	29.000	63,1	7.572,00	15,14	28,02	22,72
1500/140 New TT	15.825	2.505	14.100	1.360	2.270	33.000	63,1	8.834,00	17,67	32,69	26,50
1500/150 New TT	16.842	2.505	14.660	1.360	2.270	37.000	63,1	9.465,00	18,93	35,02	28,40
1500/160 New TT	17.672	2.505	15.490	1.360	2.270	41.000	63,1	10.096,00	20,19	37,36	30,29

matec®
machinery technology

PROJECT
Jarvis Coal - Indiana

“More than 50 installations all over the world in Coal sector.”

Terræ 1500x2000

Perfect for large plants specialized in coal treatment in mines.
Terrae 1500x2000. It is named after the Latin word for Earth, because it was specially created for and completely dedicated to every kinds of applications in quarries and mines, that is to say for areas where men use the Earth for progress.
The Terrae 1500x2000 is our big range. It is perfect for all heavy-duty sectors and includes the latest and best technologies and technical specifications. This model is available both in side-beams and over-beams:
Aggregates and recycling sector, flow rates up to 1500m3/h;
High technology and refinement mining sectors such as Iron-Ore, Coal, Silver, Gold, and in general Ferrous and Non-Ferrous ones.

Benefits :

- 100% Made in ITALY. 100% Made in Tuscany
- HPT (High Pressure Technology) to work at more than 20 BAR
- Gasser Shakers for discharging the cakes perfectly
- Real automatic washing for a complete washing
- Filter cloths attached with strips and rubber connection for an easy replacement
- Open filtrate design allows a simple and rapid identification of worn filter cloths
- Allen Bradley PLC with remote monitoring and assistance
- Number of installed plates can be up to 200 in all presses
- More than 10 models for the best economical/technical solution

Filters with 50 or more plates include the TT2Fast model (fast opening):
The TT2fast opening can discharge the cakes for 100 plates in less than 2 minutes and for 200 plates in less than 4 minutes

All made of single-block steel from thick slabs

Plasma, laser or water-jet manufacturing process

The purified water is drained through 4 external manifolds

(to avoid external contacts or leaks)

First choice components by major manufacturers

Stainless steel accessories

High speed and high pressure hydraulic system

Gasser Shaker automatic system for discharging the cakes

Cloth and plate automatic washing

PLC switchboard to control the whole system electronically.

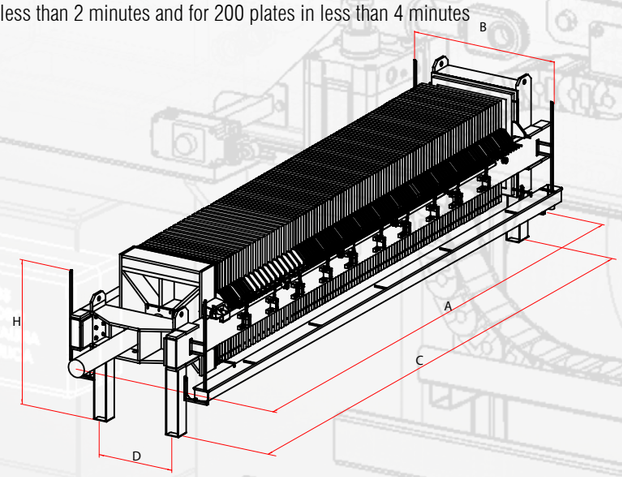

Specifications

Terræ model 1500x2000	A Length	B Width	C Foot Footbase	D Foot Footbase	H Total Height	Dry Weight (Kg)	Chamber Volume (Liters)	Capacity per cycle (Liters)	m³/h (2 cycles)	Ton/h	m³/h (3 cycles)
1500/50 New TT	8.270	2.793	6.030	1.310	2.896	24.200	85,11	4.255,50	8,51	15,75	12,77
1500/60 New TT	9.470	2.793	7.230	1.310	2.896	24.900	85,11	5.106,60	10,21	18,89	15,32
1500/70 New TT	10.280	2.793	8.100	1.310	2.896	25.600	85,11	5.957,70	11,92	22,04	17,87
1500/80 New TT	11.120	2.793	8.940	1.310	2.896	27.300	85,11	6.808,80	13,62	25,19	20,43
1500/90 New TT	11.960	2.793	9.780	1.310	2.896	29.200	85,11	7.659,90	15,32	28,34	22,98
1500/100 New TT	12.800	2.793	10.620	1.310	2.896	31.200	85,11	8.511,00	17,02	31,49	25,53
1500/120 New TT	14.480	2.793	12.300	1.310	2.896	33.100	85,11	10.213,20	20,43	37,79	30,64
1500/140 New TT	16.160	2.793	13.980	1.310	2.896	35.200	85,11	11.915,40	23,83	44,09	35,75
1500/160 New TT	17.840	2.793	15.660	1.310	2.896	37.500	85,11	13.617,60	27,24	50,39	40,85
1500/180 New TT	19.520	2.793	17.340	1.310	2.896	39.800	85,11	15.319,80	30,64	56,68	45,96
1500/200 Twin New TT	21.200	2.793	19.020	1.310	2.896	42.800	85,11	17.022,00	34,04	62,98	51,07

Magnum 2000x2000

Perfect for very large plants specialized in coal treatment in mines.
Magnum 2000x2000. It is named after the Latin word for Magnificent, because it is our top-of-the-range machine, created for and completely dedicated to every kinds of applications in quarries and mines, that is to say for areas where men use the Earth for progress.
The Magnum 2000x2000 is our biggest range. It is perfect for all heavy-duty sectors and includes the latest and best technologies and technical specifications. This model is available both in side-beams and over-beams:
Aggregates and recycling sector, flow rates up to 2000m3/h;
High technology and refinement mining sectors such as Iron-Ore, Coal, Silver, Gold, and in general Ferrous and Non-Ferrous ones

Benefits :

- 100% Made in ITALY. 100% Made in Tuscany
- HPT (High Pressure Technology) to work at more than 20 BAR
- Gasser Shakers for discharging the cakes perfectly
- Real automatic washing for a complete washing
- Filter cloths attached with strips and rubber connection for an easy replacement
- Open filtrate design allows a simple and rapid identification of worn filter cloths
- Allen Bradley PLC with remote monitoring and assistance
- Number of installed plates can be up to 200 in all presses
- More than 5 models for the best economical/technical solution

Filters with 50 or more plates include the TT2Fast model (fast opening):
The TT2fast opening can discharge the cakes for 100 plates in less than 2 minutes and for 200 plates in less than 4 minutes

All made of single-block steel from thick slabs

Plasma, laser or water-jet manufacturing process

The purified water is drained through 4 external manifolds

(to avoid external contacts or leaks)

First choice components by major manufacturers

Stainless steel accessories

High speed and high pressure hydraulic system

Gasser Shaker automatic system for discharging the cakes

Cloth and plate automatic washing

PLC switchboard to control the whole system electronically.

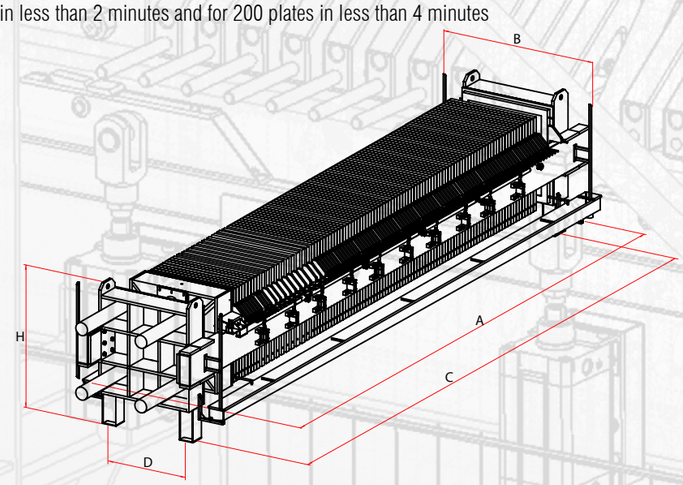

Specifications

Magnum model 2000x2000	A Length	B Width	C Foot Footbase	D Foot Footbase	H Total Height	Dry Weight (Kg)	Chamber Volume (Liters)	Capacity per cycle (Liters)	m³/h (2 cycles)	Ton/h	m³/h (3 cycles)
2000/140 New TT	17.590	3.430	14.960	1.356	3.795	45.760	115	16.100,00	32,20	59,57	48,30
2000/200 Twin New TT	22.820	3.430	20.200	1.356	3.795	55.640	115	23.000,00	46,00	85,10	69,00

PROJECT
Armstrong- Kentucky

“Big projects, turnkey engineering plants for works up to 200 tph.”

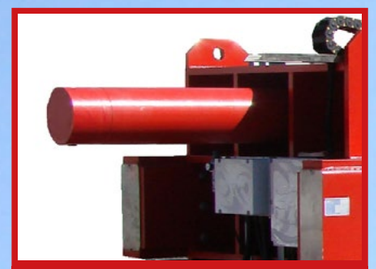

TESTED 10.000 PSI
(700 BAR)

TT2FAST
THE FASTER OPENING

OPEN FILTRATE DESIGN

AUTOMATIC REAL WASHING

SHAKER "GASSER"

ALLEN BRADLEY
SIEMENS TECHNOLOGY

HIGH THICKNESS STEEL

matec®
machinery technology

BORN TO BE PERFECT

TURNKEY WATER TREATMENT AND FILTERPRESS

NO PERSON, NO POLYMER, NO PROBLEMS!

Turn Hard-To-Handle Sludge Into Easy-To-Handle Dry Cakes
With The Matec Plate & Frame Press

MOISTURE < 20%

HPT® HIGH PRESSURE TECHNOLOGY

20 BAR

PROJECT
Rhino Kerco - Kentucky

“Matec provides turnkey High-Tech and easy-to-manage solutions.”

PROJECT
Addwest - Arizona

“Matec filter presses can handle all capacities and projects.”

PROJECT
Samuel Engineering - Utah

Decanter Silos

Matec produces purification plants for many different industries, for a perfect clarification of wastewater. Decanters are available in two versions:

Vertical decanters

Based on the principles of static decantation and natural precipitation of suspended solid particles. They speed up the clarification process through perfectly-sized silos, with a thrust cone and a water column which presses the sludge, and the use of an appropriate polyelectrolyte (flocculant). Matec offers the quickest clarification process for any type of wastewater.

Horizontal decanters (scraper bridge)

Ideal for large water flow rates, they have a limited height and are provided with an upper sludge thickening system. They are operated by a scraper-blade bridge, which pushes the sludge that sinks to the bottom before being pushed out. The discharging is an automatic operation adjusted to the bridge effort. The sludge thus condensed can be disposed of into artificial lakes, quickly filtered by the filter press system.

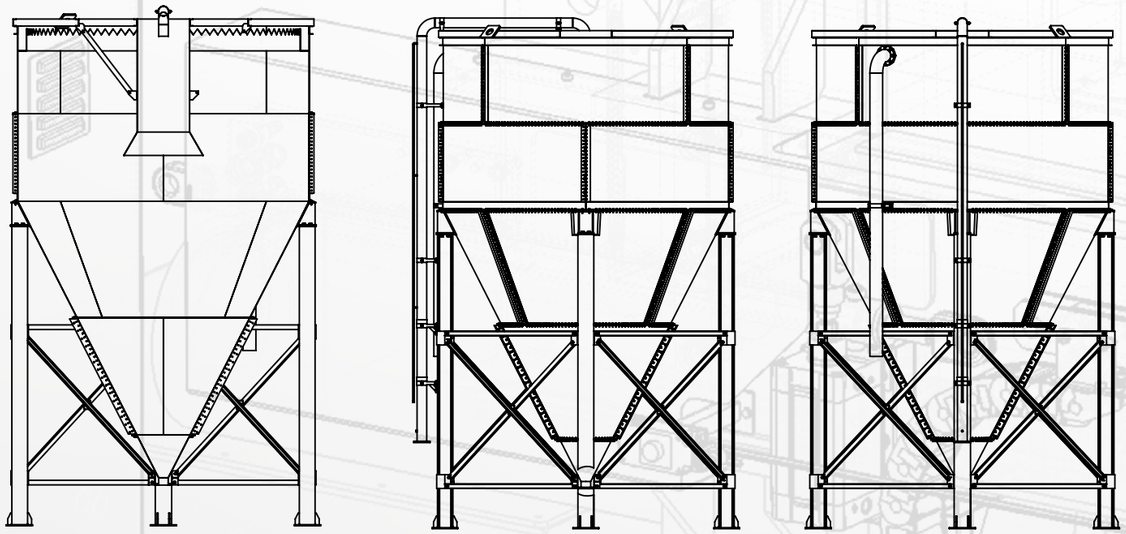

Specifications

Model	Capacity / lt	Purified lt / min
SILOS INOX Ø 1.500 HF 1.500 HC 1.500	3.000	150
SILOS INOX Ø 1.500 HF 2.000 HC 2.000	4.600	200
SILOS INOX Ø 2.000 HF 2.000 HC 2.000	8.500	350
SILOS INOX Ø 2.200 HF 2.000 HC 2.000	10.000	400
SILOS INOX Ø 2.300 HF 2.500 HC 2.500	15.000	600
SILOS INOX Ø 2.500 HF 3.000 HC 3.000	20.000	800
SILOS INOX Ø 2.500 HF 4.000 HC 4.000	25.000	1.000
SILOS INOX Ø 3.000 HF 3.000 HC 3.500	30.000	1.200
SILOS INOX Ø 3.000 HF 4.000 HC 3.500	35.000	1.500
SILOS INOX Ø 3.500 HF 3.000 HC 3.500	40.000	1.700
SILOS INOX Ø 3.500 HF 3.500 HC 3.500	45.000	1.800
SILOS INOX Ø 3.700 HF 3.500 HC 3.500	50.000	2.000
SILOS INOX Ø 3.700 HF 4.000 HC 4.000	55.000	2.200
SILOS INOX Ø 4.000 HF 4.500 HC 4.000	75.000	3.000
SILOS INOX Ø 4.500 HF 4.500 HC 4.450	100.000	4.000
SILOS INOX Ø 5.800 HF 5.500 HC 5.000	180.000	7.000
DECANTER DIAM. 10	470.000	9.000
DECANTER DIAM. 13	600.000	10.000

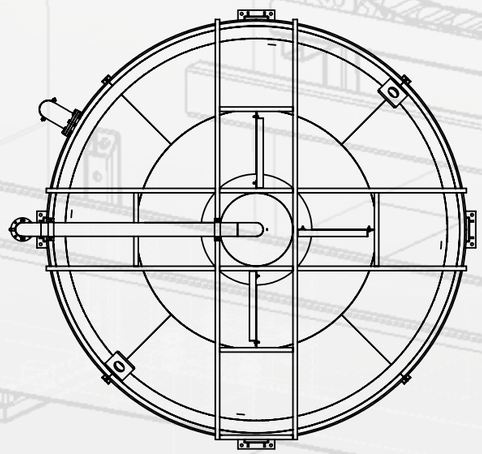

PROJECT
Metz - France

TECHNICAL
Technical Support

Thanks to our highly skilled engineers, our global supplying/dealing network and our factory service personnel we can guarantee you an extensive range of services whenever you require them. Whatever business is yours it is important to us.

Matec provides all supplying/dealing service staff with a comprehensive training program. Our staff is equipped with the correct skills, exhaustive knowledge, methods and practices to support with pre-sales and after-sales service.

QUALITY
Quality & Warranty

Matec equipment is rigorously tested, with high quality standards set for each step of the manufacturing process from design to distribution. Thus we can guarantee high quality and reliability.

If you experience problems with our equipments, your local supplier can access the online warranty system to solve the problem as soon as possible. Your feedback will be also incorporated into our R&D program to continue the development of our products.

24 MONTHS Guarantee

Member of CISQ Federation
RINA
ISO 9001:2008
Certified Quality System
Sistema di gestione aziendale certificato n° 16124/07/S
Management system certificated n° 16124/07/S

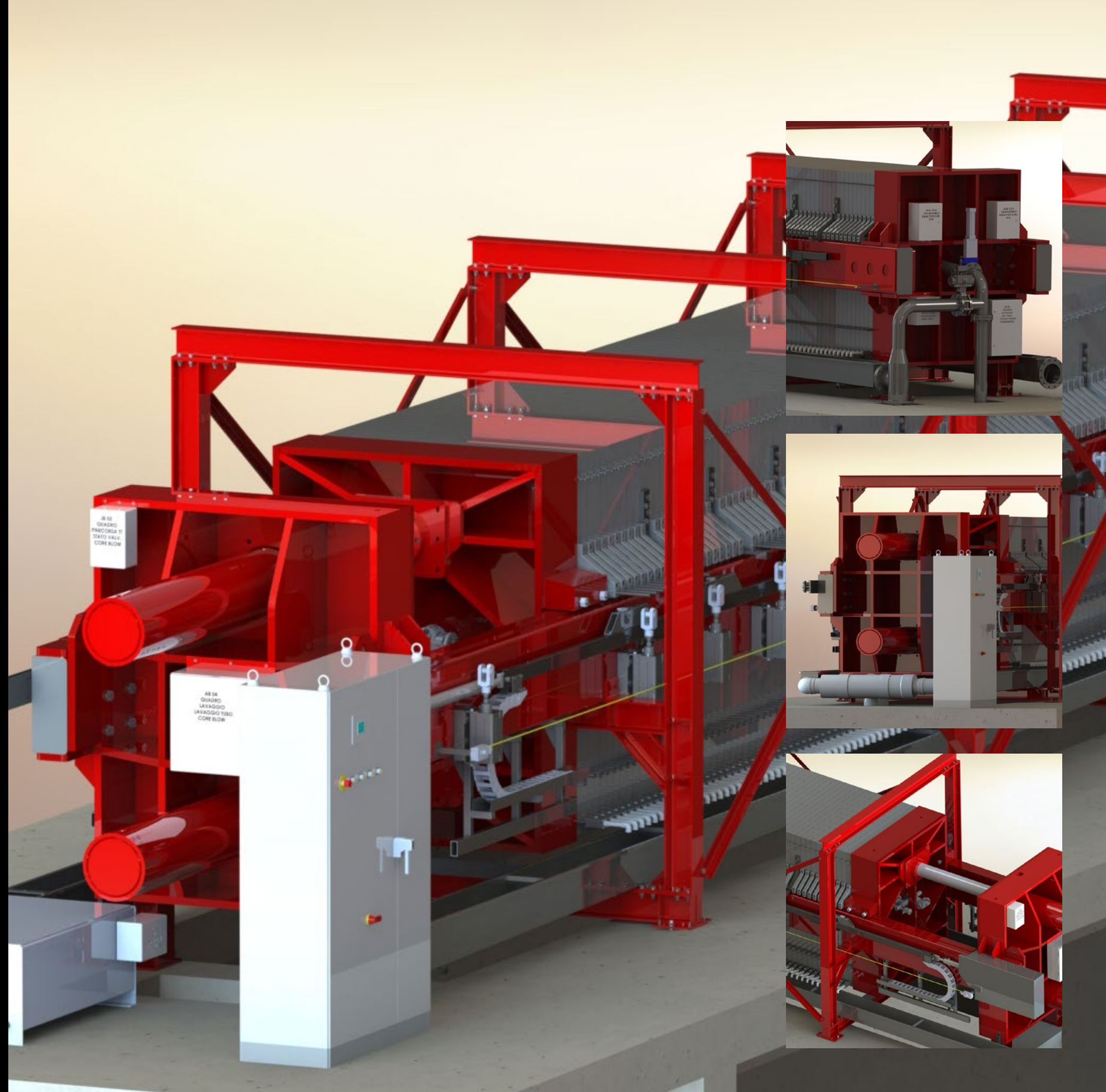

matec®

matec® CORPORATION srl

Matec Corporation S.r.l.

Via San Colombano, 13
54100 Massa (MS) Italy
Tel. +39.0585.831034
Fax. +39.0585.835598

www.mateccorporation.it

matec® America

Matec America LLC

130 Plant Street
Walnut Cove, NC 27052
Tel. 270-841-9180
Fax. 336-591-9254

www.matecamerica.com

matec® machinery technology

Matec S.r.l.

Via Aurelia Ovest, 383
54100 Massa (MS) Italy
Tel. +39.0585.831034
Fax. +39.0585.835598

www.matecitalia.com

ENGLISH